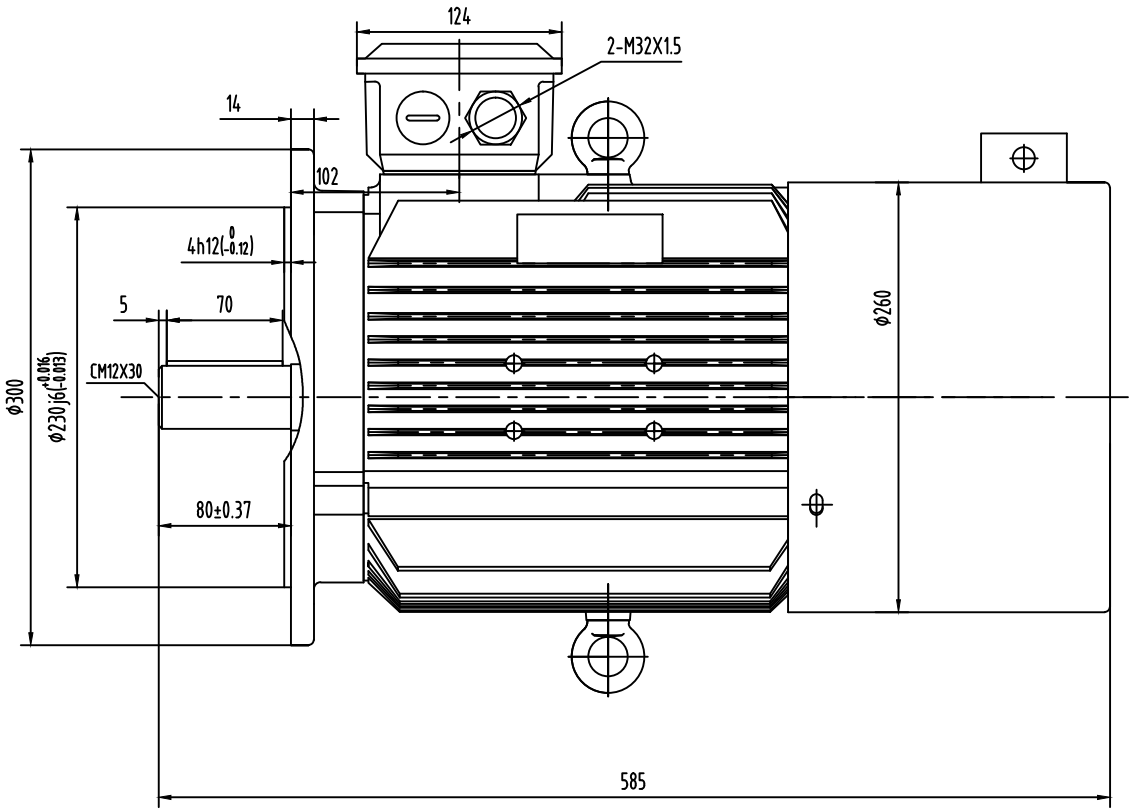

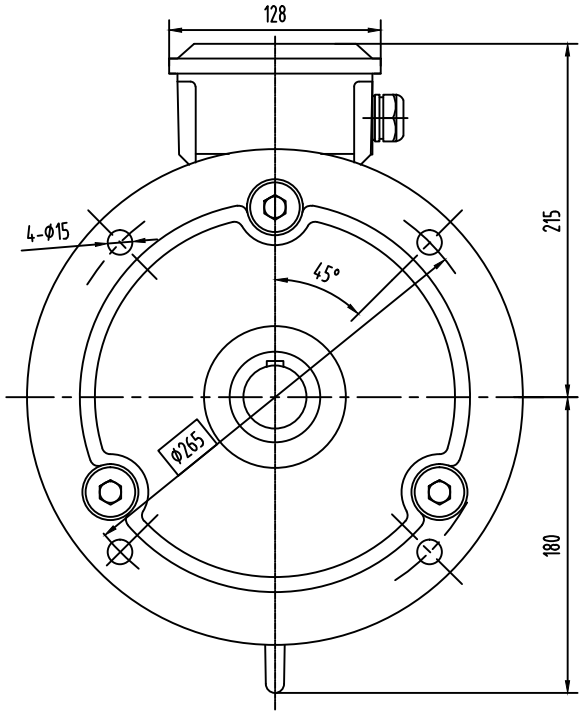

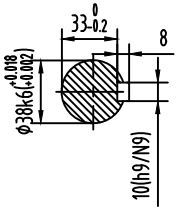

								OUTLINE
Mark	No.	Zone	File changing No.	Signature	Date			
Design			Standard			Sign	Weight	Scale	OMV0-132M0-04~08P B5
Check								1:3	
Auditing									Wuxi OMEC LTD.
Technics			Approval			Total page	page No.		